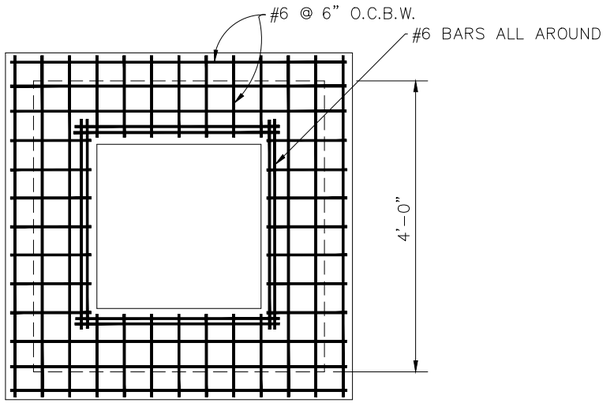

TOP SLAB REINFORCING

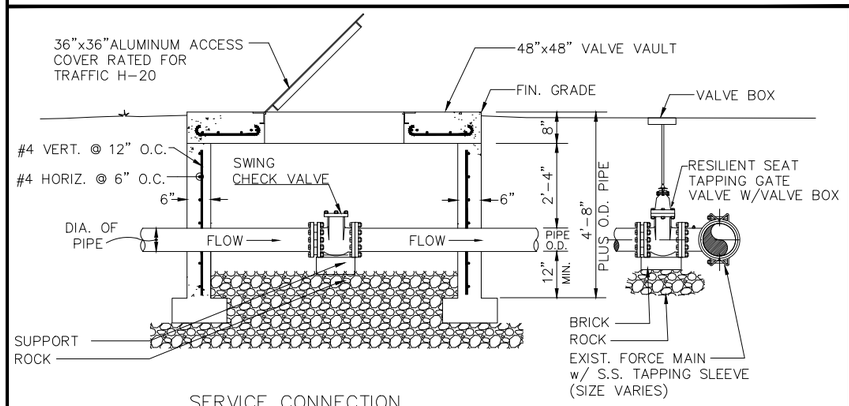

SERVICE CONNECTION
FOR EXISTING FORCE MAIN

NOTE:
1. INSTALL TRACING WIRE
2. INSTALL EARLY WARNING TAPE
3. MINIMUM OF 6" SERVICE

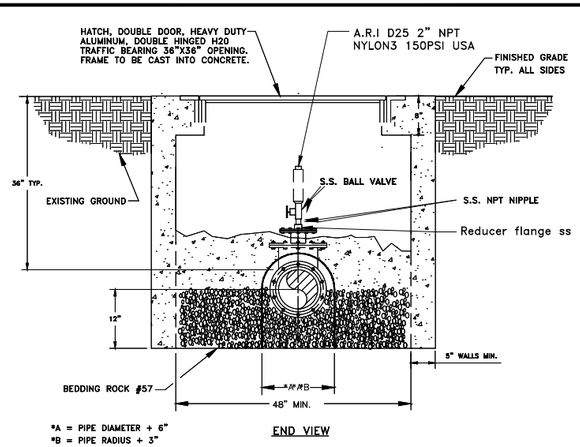

FORCE MAIN
AIR RELEASE VALVE

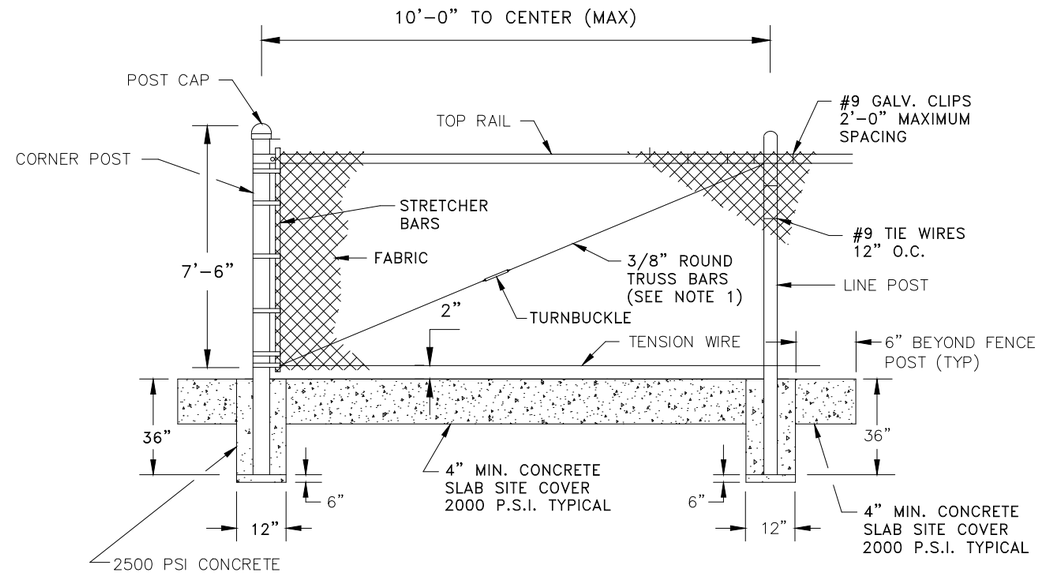

FENCE DETAIL

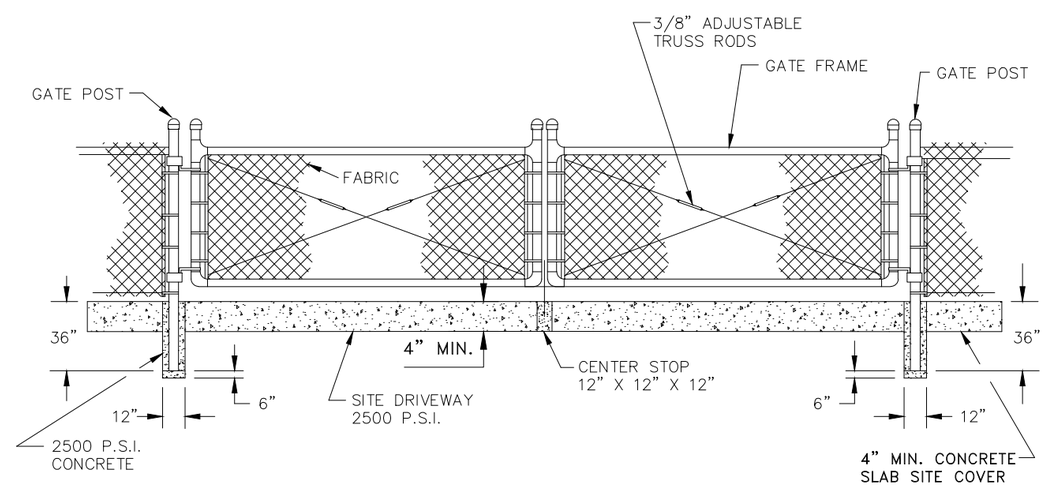

DOUBLE SWING GATE DETAIL

NOTES:
1. TRUSS RODS ARE REQUIRED FOR EACH GATE SECTION AND THE FIRST SPAN EACH SIDE OF A CORNER POST ONLY.

ISSUE CODE		
MODIFIED	MJC	06-03-22
MODIFIED	ROS	12-27-23
MODIFIED	ROS	11-05-24

CITY OF LAKE WALES
201 CENTRAL AVE 863-678-4182

REV.	DESCRIPTION

ISSUE CODE				
	A	PRELIMINARY	B	DESIGN
C	BIDS	D	CONSTRUCTION	E APPROVAL

DESIGN BY:
CHK'D BY: DATE:
DRAWN BY: ENGR.
DRAWING TITLE
WASTEWATER DETAILS
JOB NO.
SHEET — OF — REV.